BRAN H/2 DLC Update

- Joint BRAN H/A & 802.NW session -

Harold Teunissen
Lucent Technologies

hteunissen@lucent.com

Contents

- What is HIPERLAN/2?
- Roadmap
- Protocol Stack of H/2
- Main Decisions/Working Assumptions
- 802.11 vs. HIPERLAN/2
- Final Remarks

What is HIPERLAN/2?

- **Indoor Cellular Wireless LAN which offers Quality of Service to the User**
- **Support for Multiple Core-networks**
  - » IP, ATM, UMTS
  - » etc.
- **Range < 50 m**
- **Bandwidth ~ 25 Mbps**
- **Publications**
  - » Definition of Requirements (TR 101 031)
  - » System Overview (to be approved BRAN #12)

H/2 Roadmap

- **1st Phase Includes All (Mandatory) Features for Interoperability**
- **2nd Phase Includes all *Nice to Have* (Optional) Features**

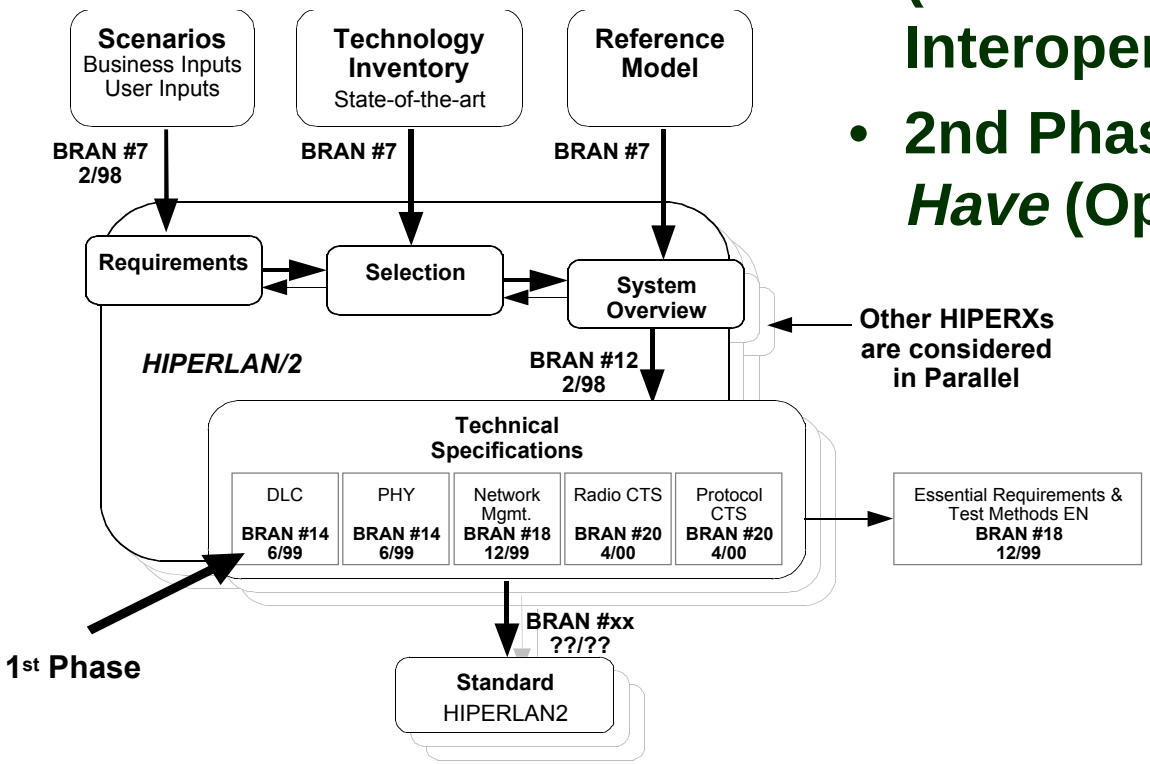

Protocol Stack of H/2

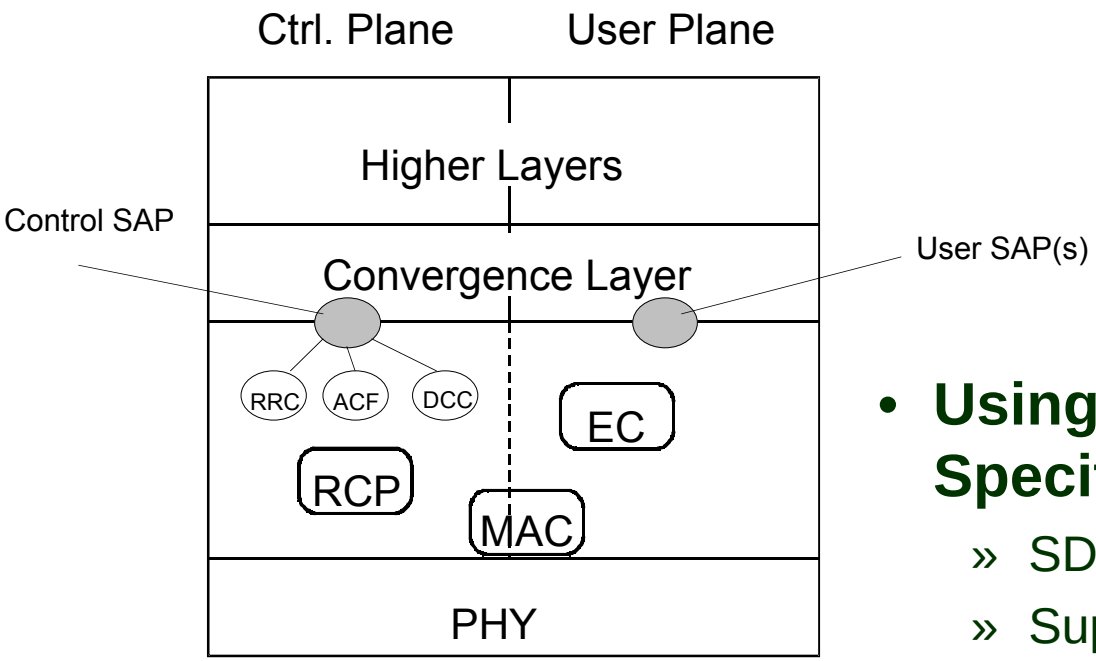

- **Using Formal Methods for Specification of RCP**
  - » SDL
  - » Support by ETSI PEX
  - » Validation
  - » Simulation
  - » Test Case Generation

Main Decisions/Working Assumptions (1)

- **H/2 DLC + PHY Core Network Independent**
- **TDMA/TDD Access Scheme**
- **Fixed MAC Frame Duration**
- **MAC Frame Period Partitioned into Phases**
- **Connection Oriented DLC**
- **Per-DUC Signaling**
- **Scheduler not standardized**
- **Support for Sectored Antennas**
- **Random Access Channel**
  - » Un-partitioned (e.g. S-ALOHA)
  - » Partitioned (e.g. Splitting)
- **etc.**

MAC Frame Phases

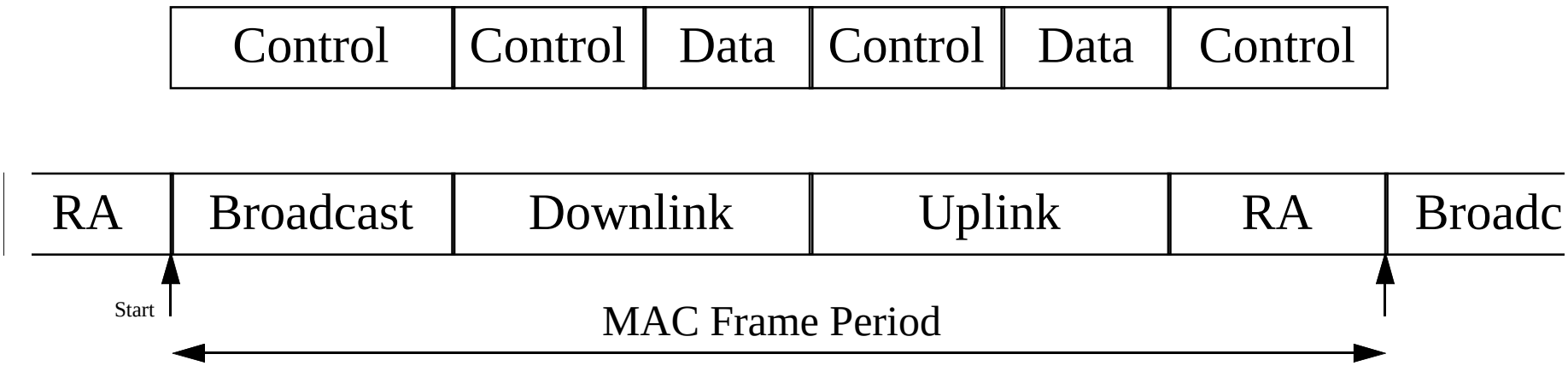

- **Ordering of phases not mandatory**
- **Only Broadcast Phase at beginning of MAC Frame**
- ***UMTS like* Transport and Logical Channel definitions**

IEEE 802.11 vs. H/2

H/2	802.11
Quality of Service	First Come First Serves
(Centralized) TDMA/TDD	(Distributed) CSMA/CS
Support for Multiple Core Networks	Support for IEEE 802.2
Connection Oriented	Connectionless
Fixed Sized DLC-PDUs	Variable Sized MAC-PDUs
Radio Handover	??
Network Handover	(IAPP)
Power Management	Power Management
Security	Security
SDL Spec. before…	SDL Spec. after…
…	…

Final Remarks

- **First Draft available BRAN #14**
- **H/2 and 802.11 different *Birds***
  - » Different Application Areas
- **Questions?**