TECHNICAL TRIALS WITH IP/ATM WIRELESS ACCESS AT 28 GHZ

P. Karlsson, N. Löwendahl, M. Persson and P. Walter

Radio Access Malmö / Telia Research AB

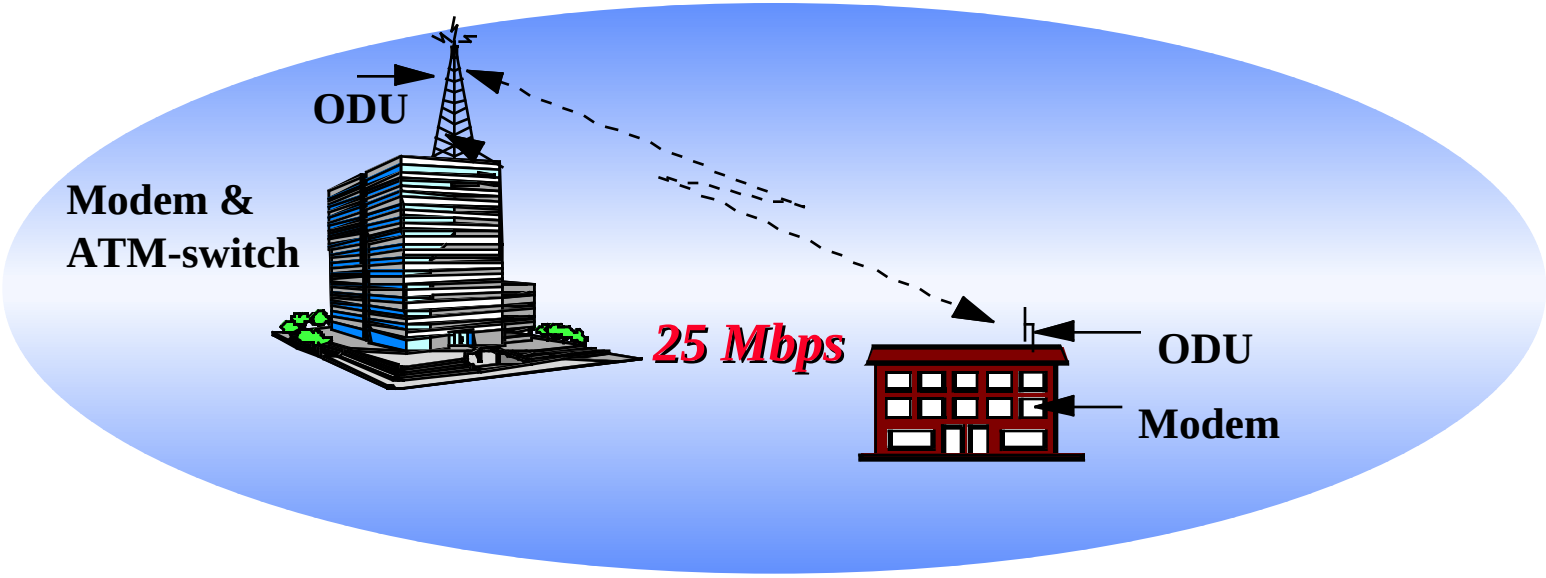

Outline of Presentation

- Broadband Radio Access - LMDS
- Wave Propagation Measurements
- Technical Trial Scenarios
- Description of Prototype Systems
- Results from the Telia Trials
- Conclusions

LMDS Deployment Scenario

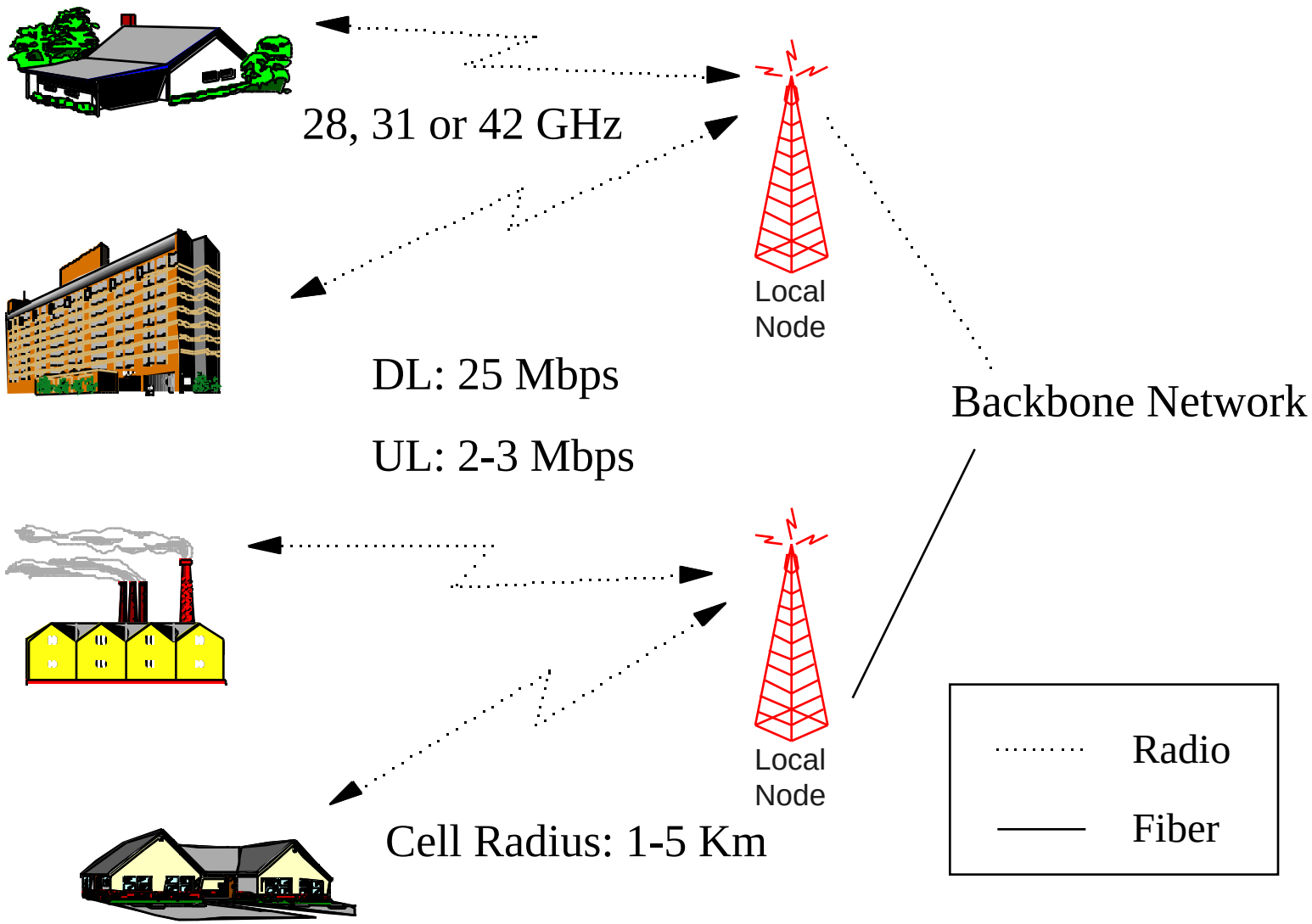

Telia LMDS Trials

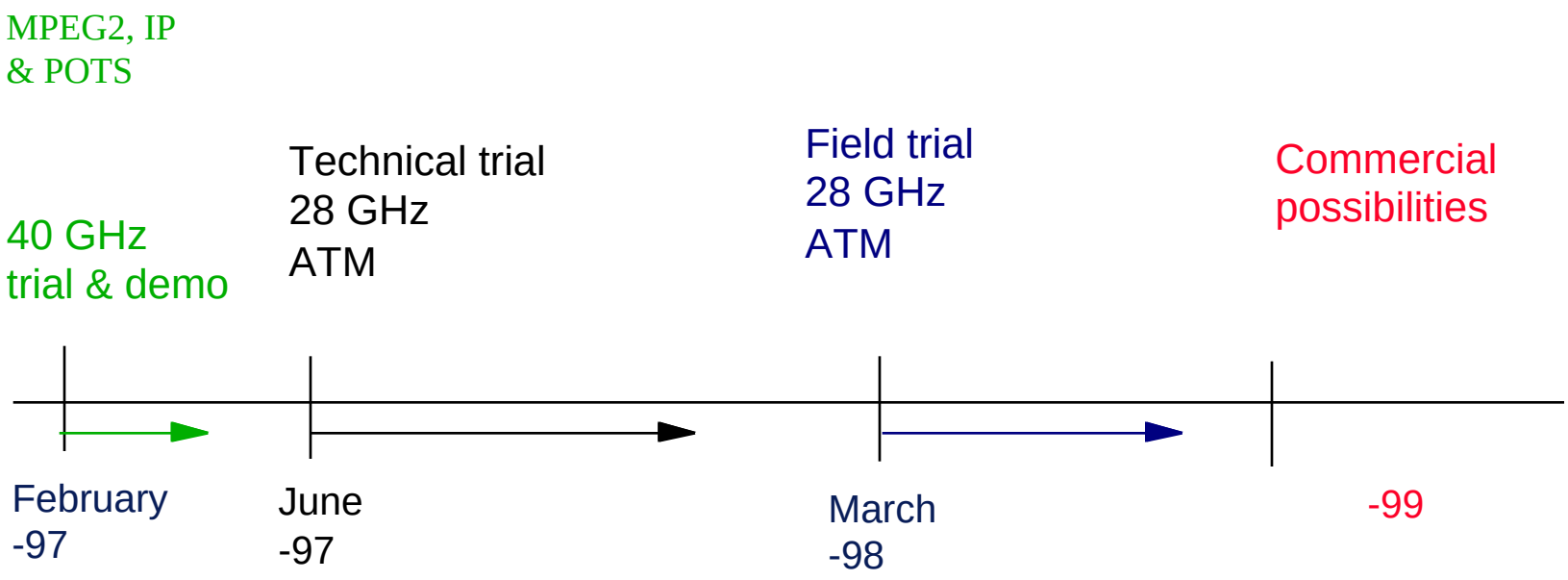

Successful LMDS Trials at Telia

- Technical LMDS trial:
  - 25 / 3 Mbps (DL/UL), ATM-based, two-way services
  - Started June 1997
  - System measurements (BER, CER, CLR)
  - Promising results
    - No problems with Cell loss/-errors or round trip delay for clear LOS-conditions
- Field trial
  - 25 / 3 Mbps (peakrate per subscriber), IP/ATM-based, two-way services.
  - 25 customers, 2 base stations with 3 sectors, March 98

Propagation Measurement Results

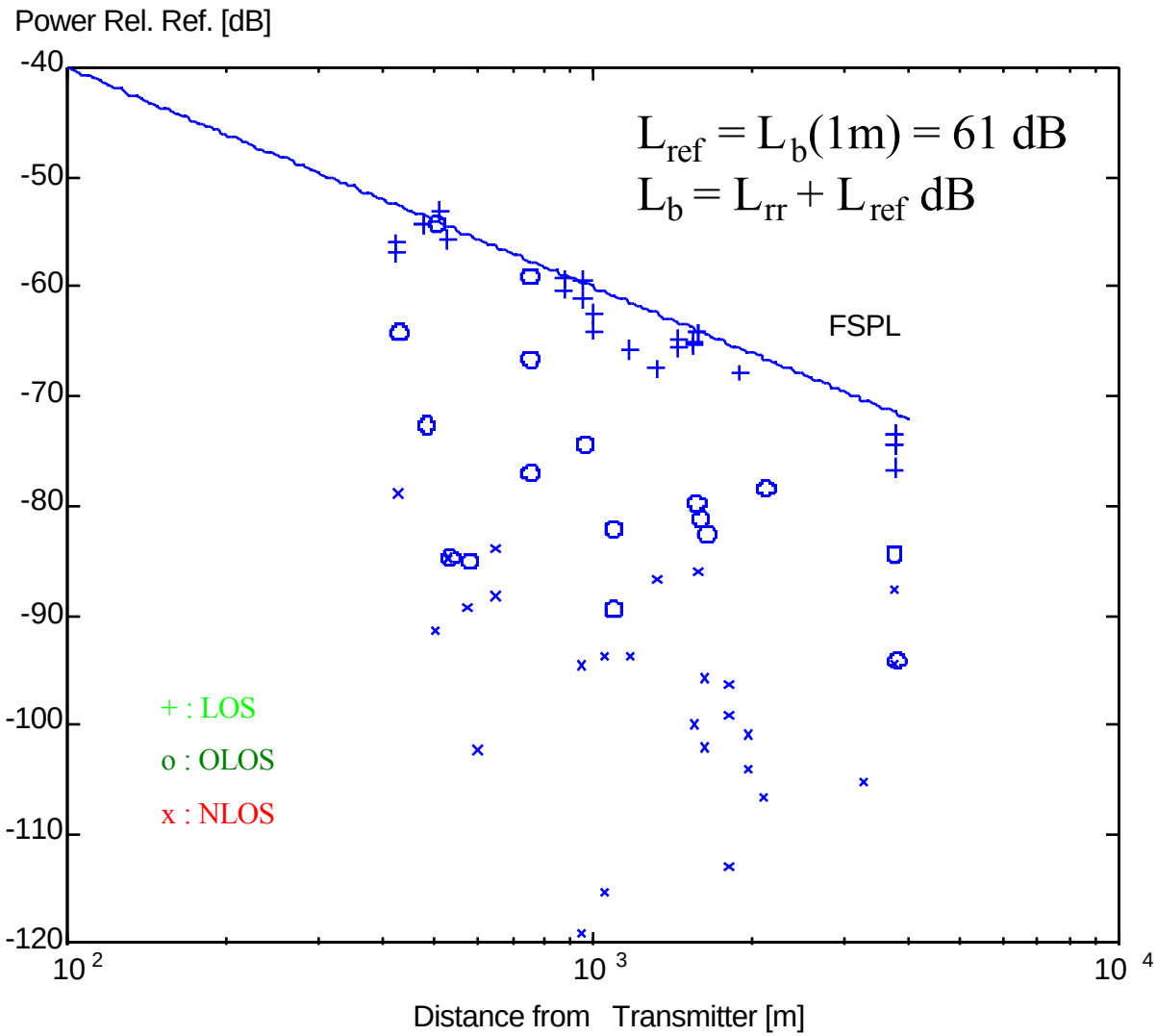

Spatial averages at each location.

Agreement with FSPL in clear LOS.

OLOS: L_{add}= 18 dB

NLOS: L_{add}= 31 dB

Statistical Analysis of Fading

LOS
Normal distribution

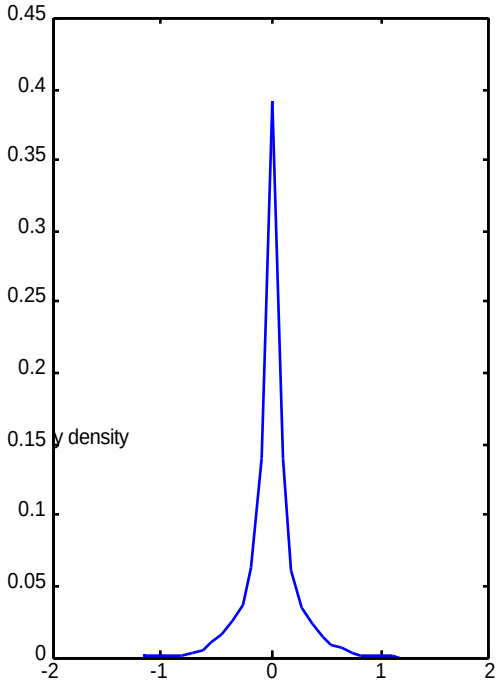

OLOS
Rice, K=7

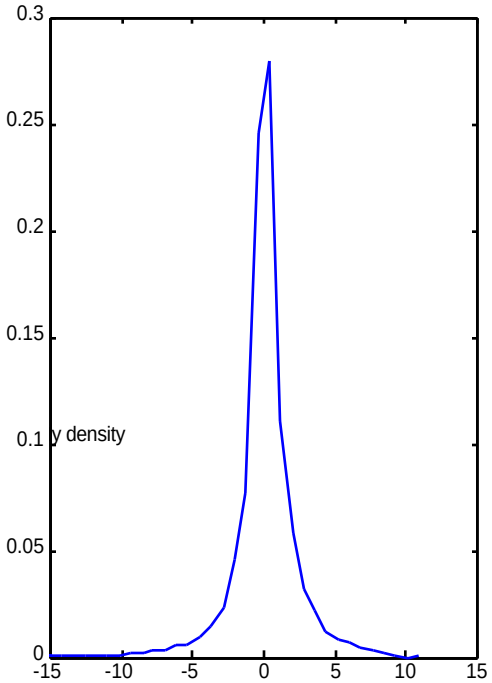

NLOS
Rice, K=2

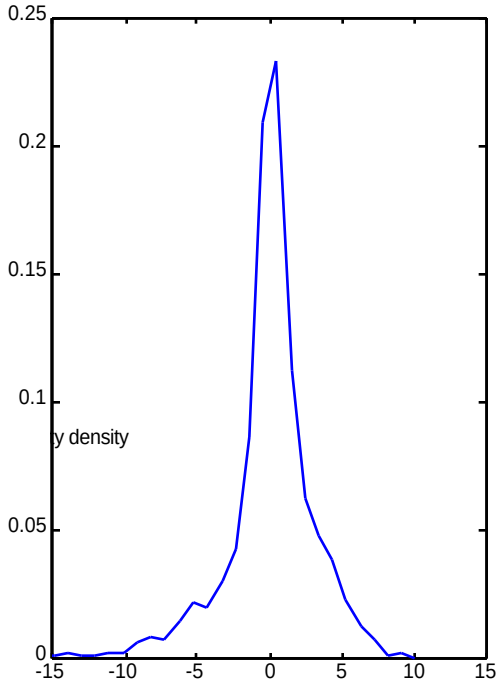

Link Budget and System Parameters

	Downlink I	Uplink I	Downlink II	Uplink II
Frequency	28 GHz	29 GHz	28 GHz	31 GHz
TX power/Carrier	20 dBm	17 dBm	22.5 dBm	20 dBm
Antennas	6 dBi	28 dBi	12 dBi	30 dBi
EIRP	25.4 dBm	42.0 dBm	33.9 dBm	47.0 dBm
RX power @ 2 km	-77.0 dBm	-80.0 dBm	-66.5 dBm	-69.3 dBm
C/N @ 2 km	18.2 dB	23.9 dB	28.6 dB	34.8 dB
C/N BER Thresh.	13.5 dB	19.1 dB	11.0 dB	17.1 dB
Link Margin	4.7 dB	4.6 dB	17.6 dB	17.7 dB
System Margin	1.9 dB	2.0 dB	14.8 dB	14.7 dB

CPE - Customer Premises Equipment

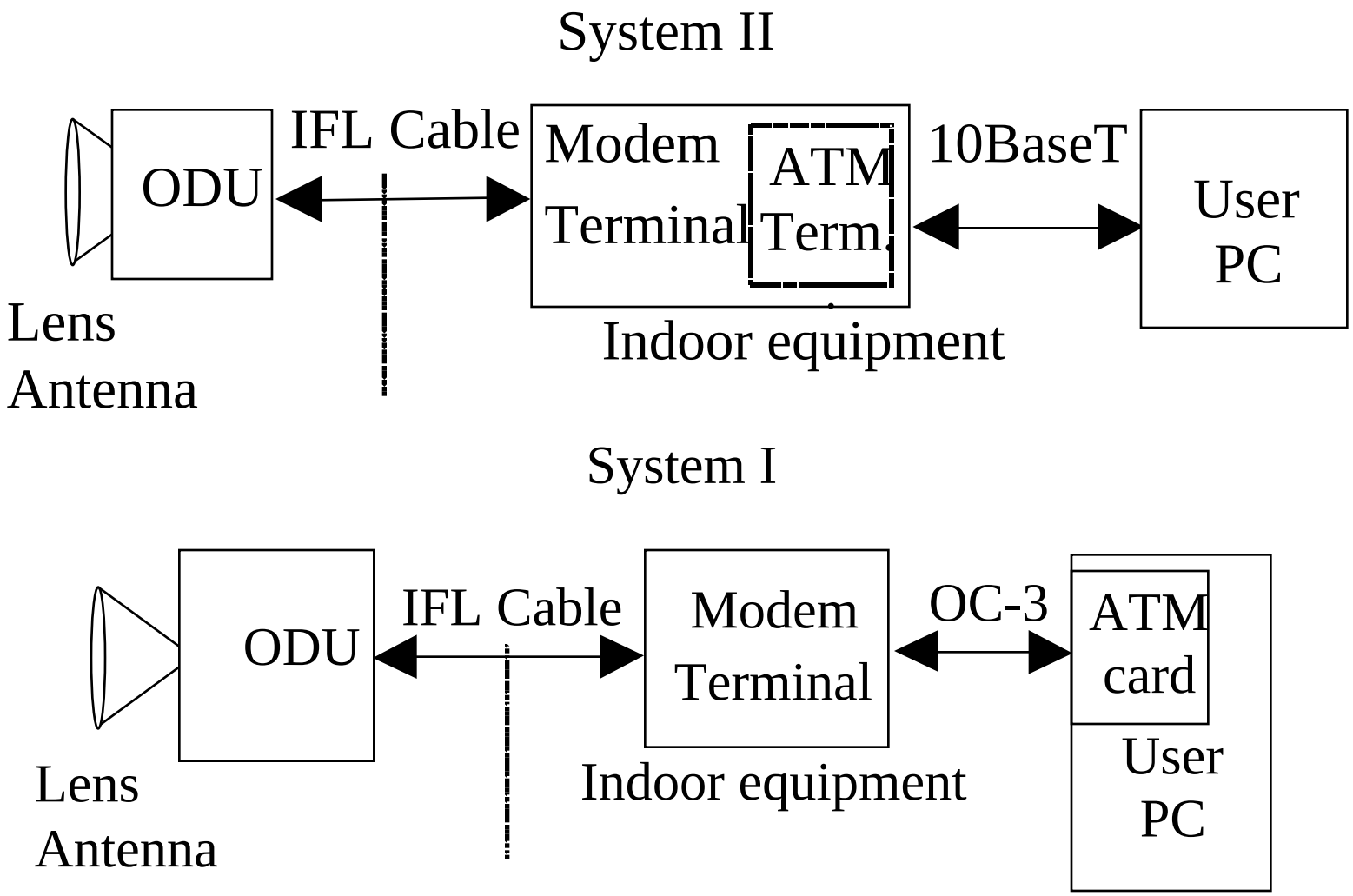

Base Station (BS) Configuration

System I

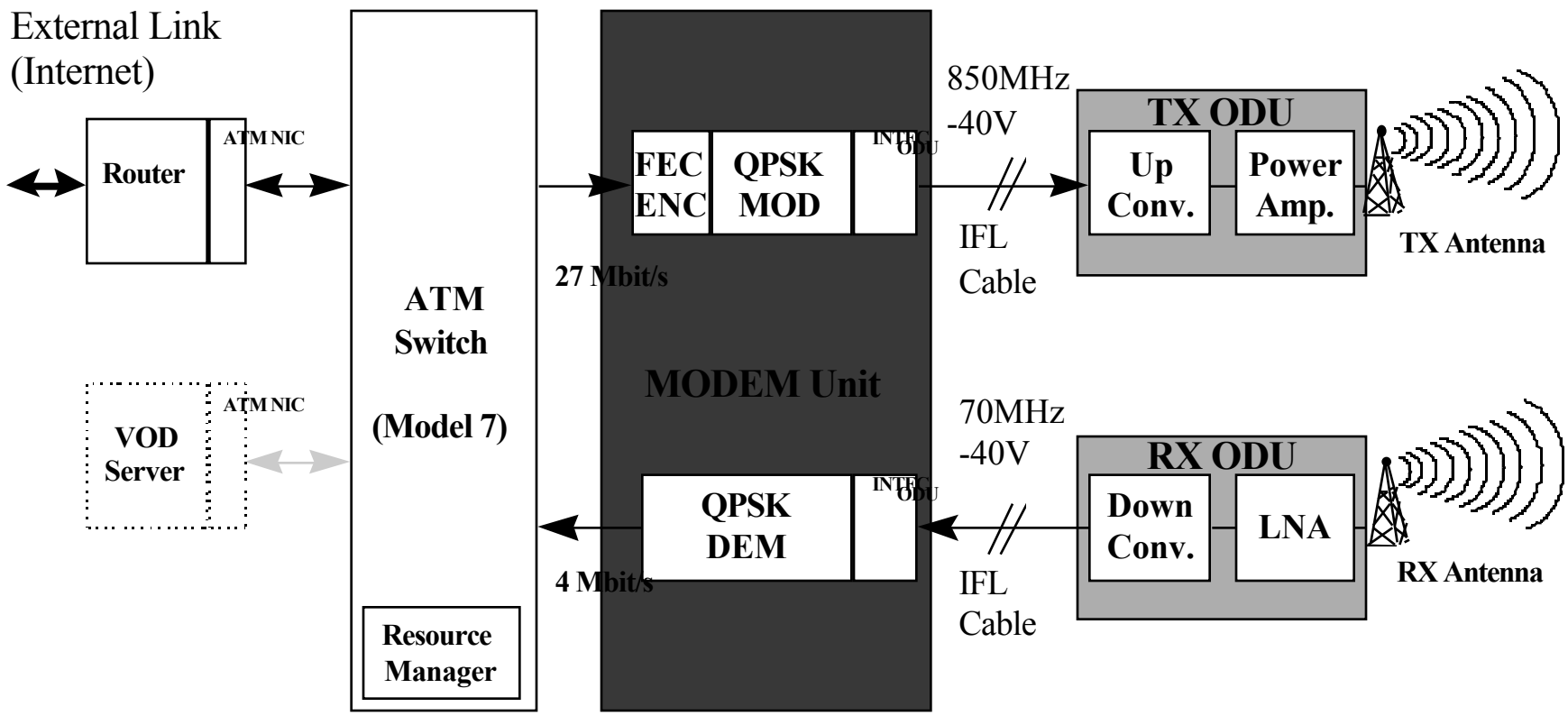

Measurement Configuration

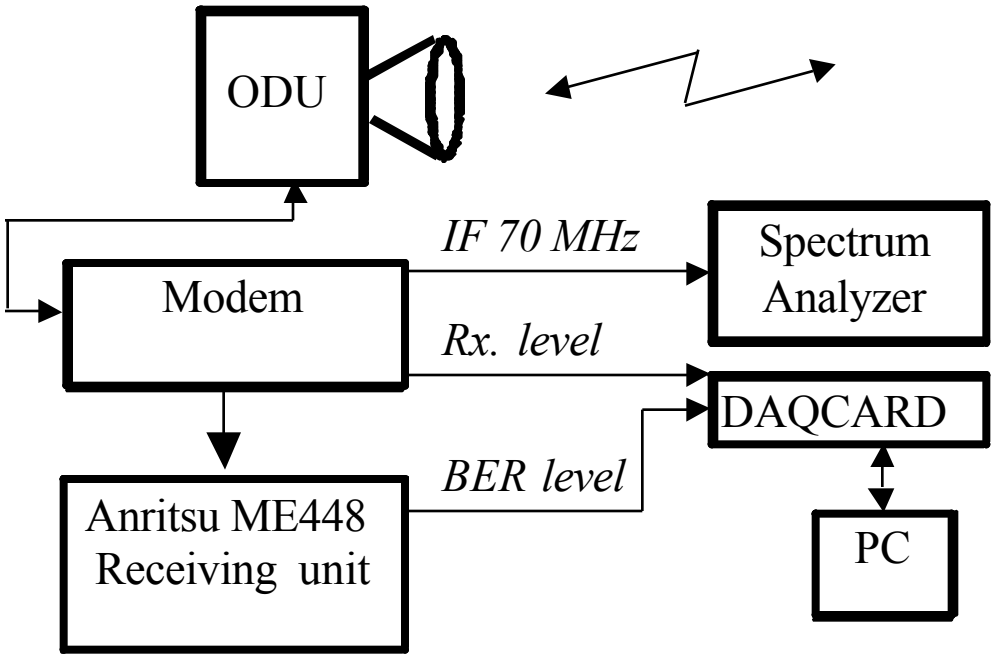

Sampling of Rx and BER levels at CPE.

Uplink performance at BS and downlink performance at CPE sampled simultaneously.

LMDS Trial Scenario in Malmö

System I

d = 1400 m

L_b = 124 dB

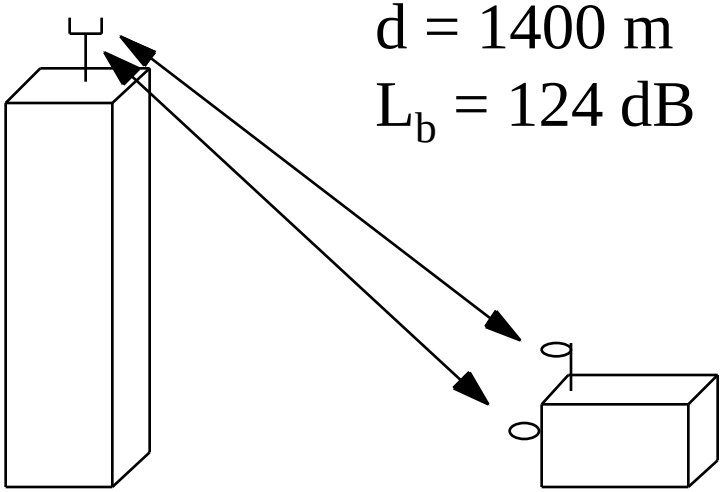

Base Station
”Kronprinsen”
h = 85 m

2 CPE’s
”TRAB”
h = 20 m,
h = 7m

ODU on the Roof - LOS condition

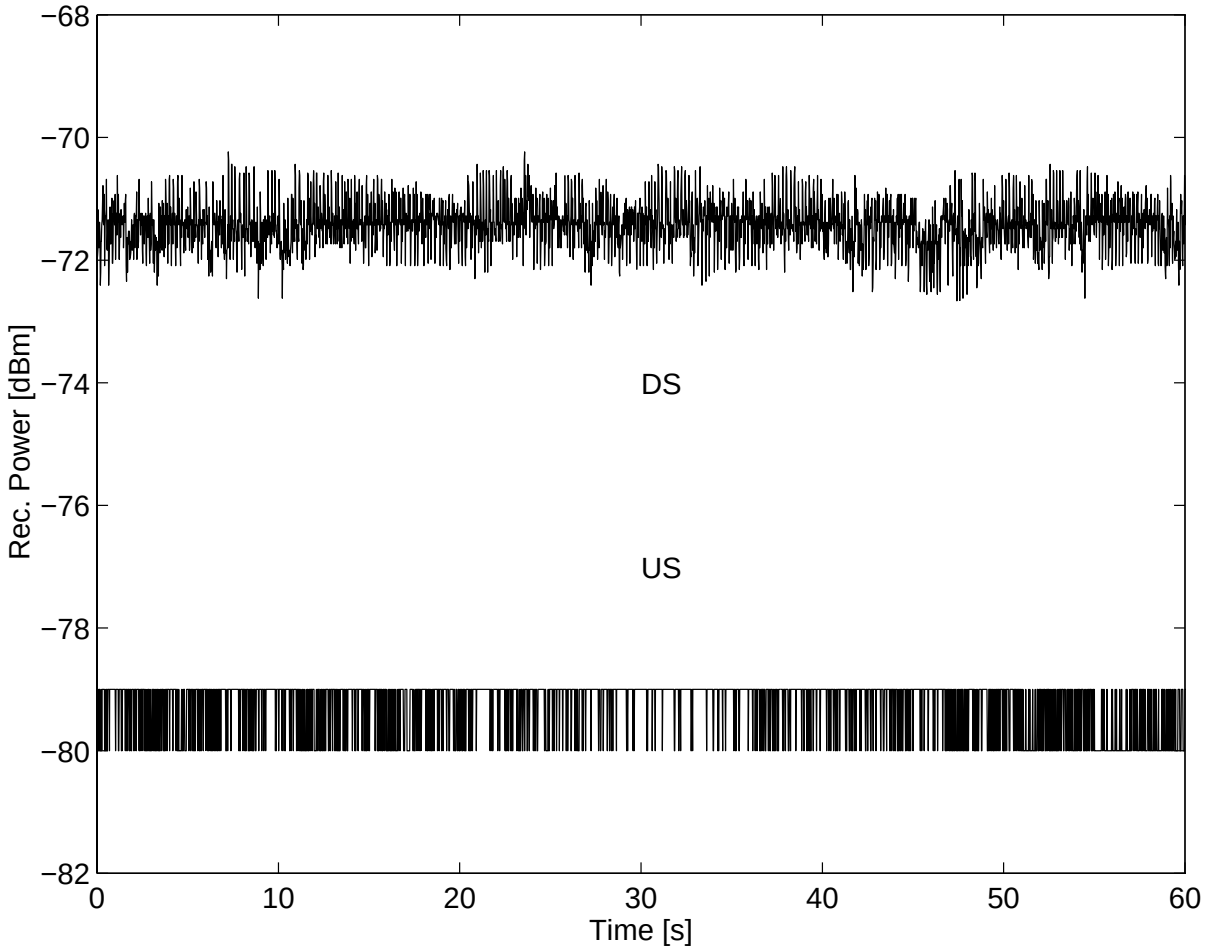

DS margin 11 dB
US margin 6 dB

Fading ≈ 1 dB!

No Bit Errors during 10 min!

ODU at Room 314, left side

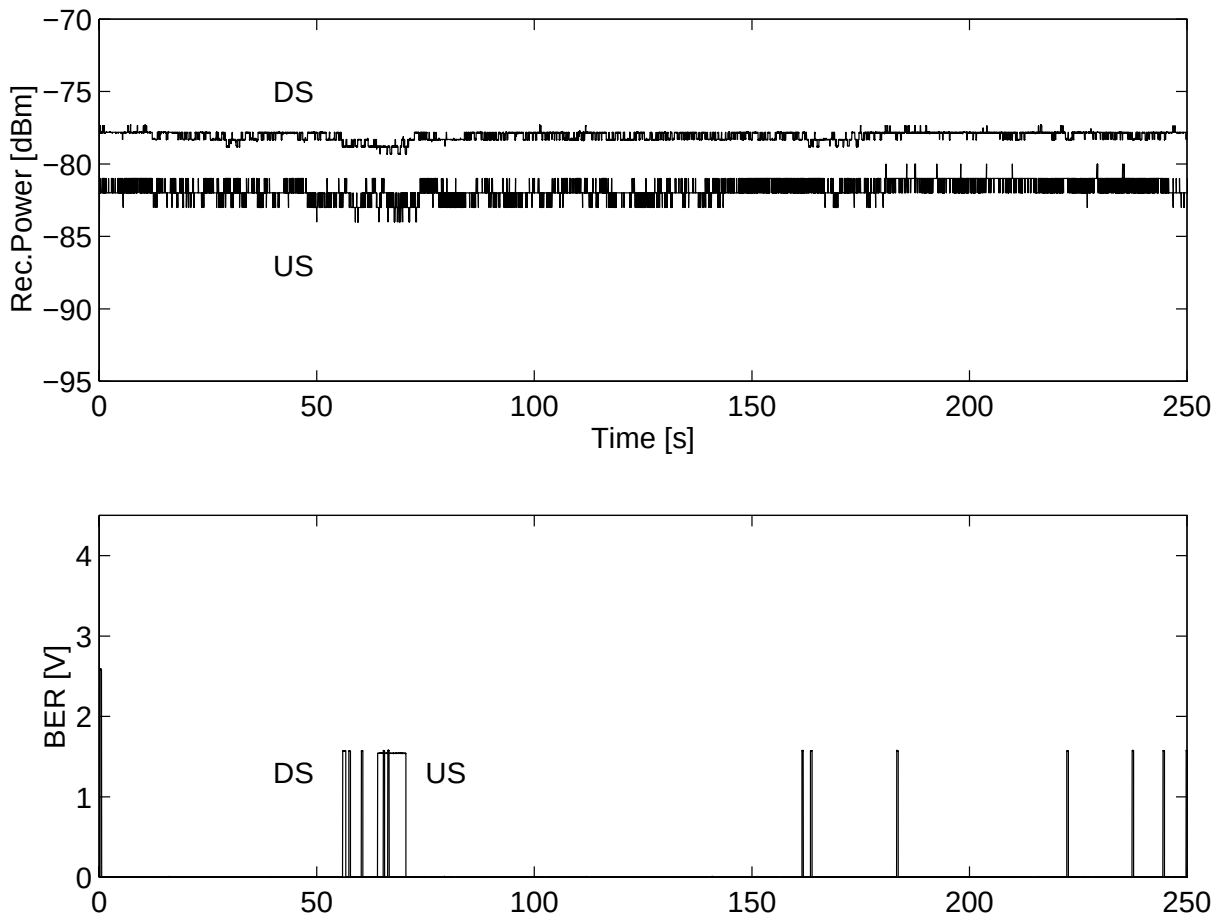

h ≈ 7 m
DS margin 4 dB
US margin 3 dB
Bit errors due to fading 10^{-7}.

ODU at Room 314,right side

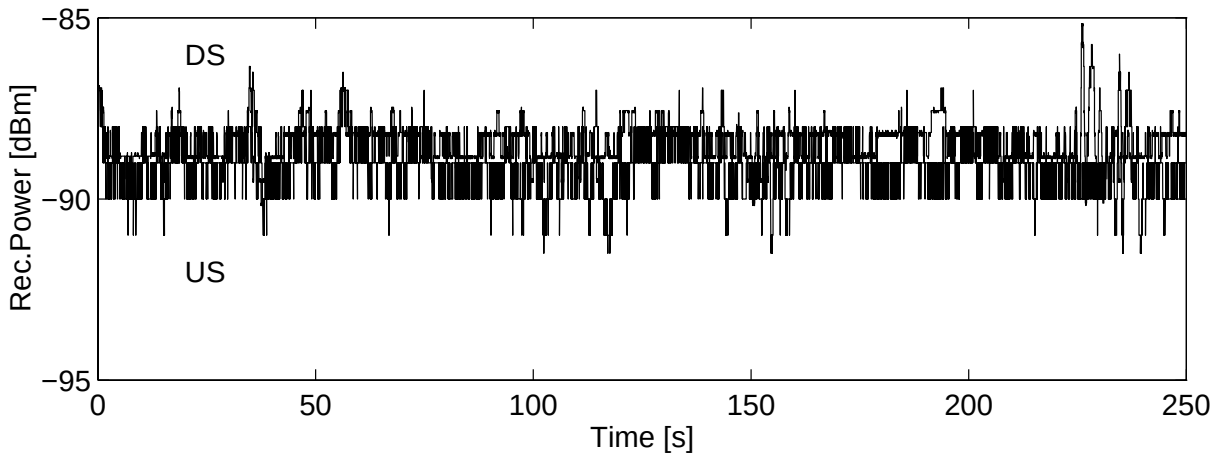

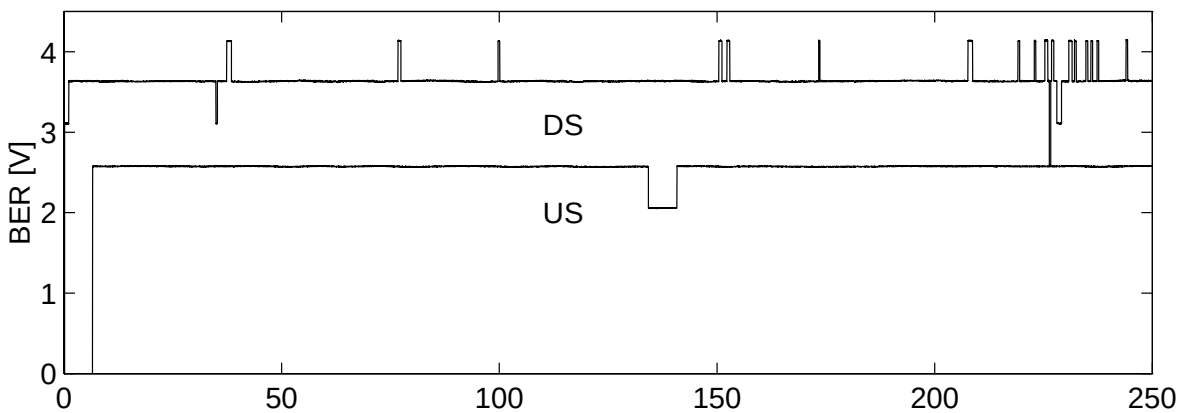

Tree obstruction:
C/N < threshold
BER > 10^{-4}

Downlink During Rain Shower

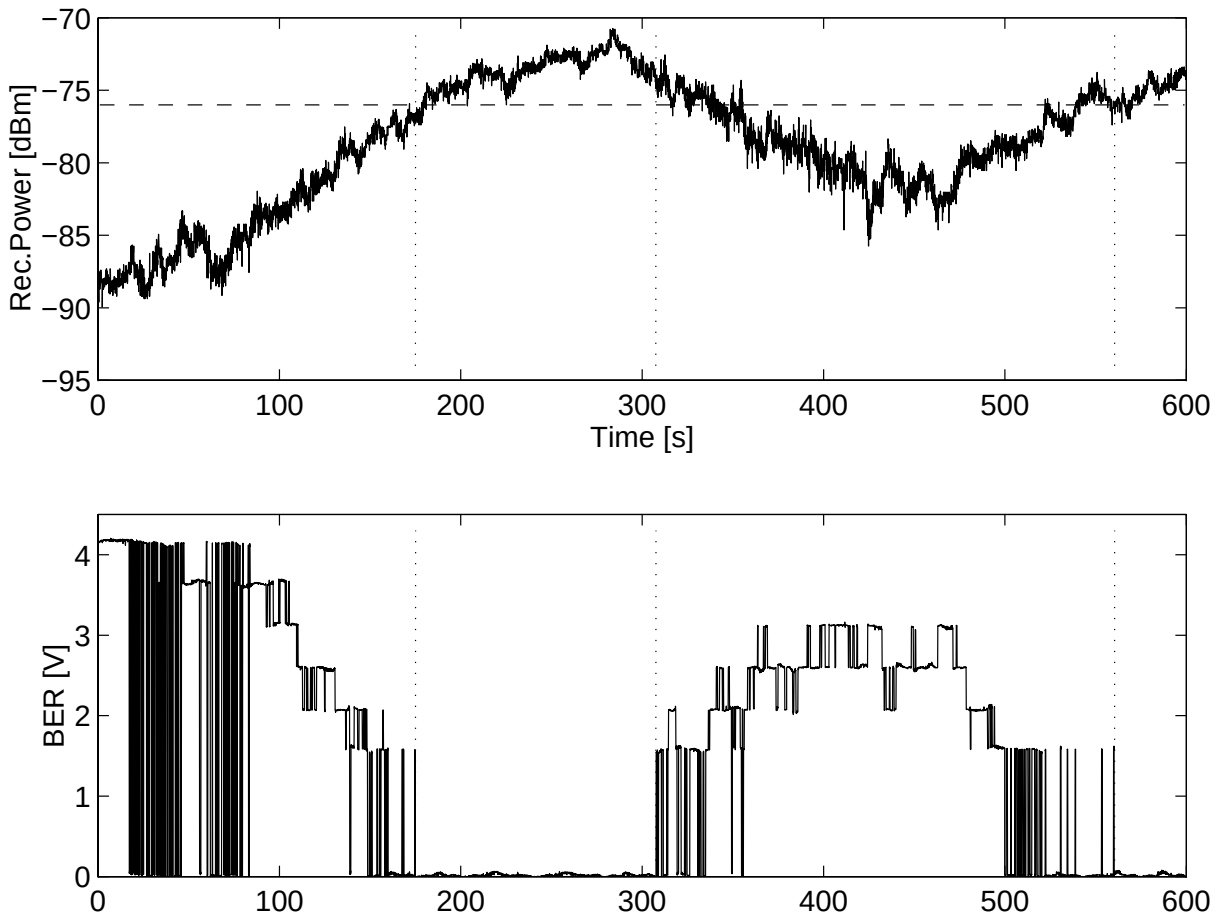

Rain Attenuation
Max 16 dB
P > -76 dBm:
No Bit Errors

ATM Measurements for CER/CLR

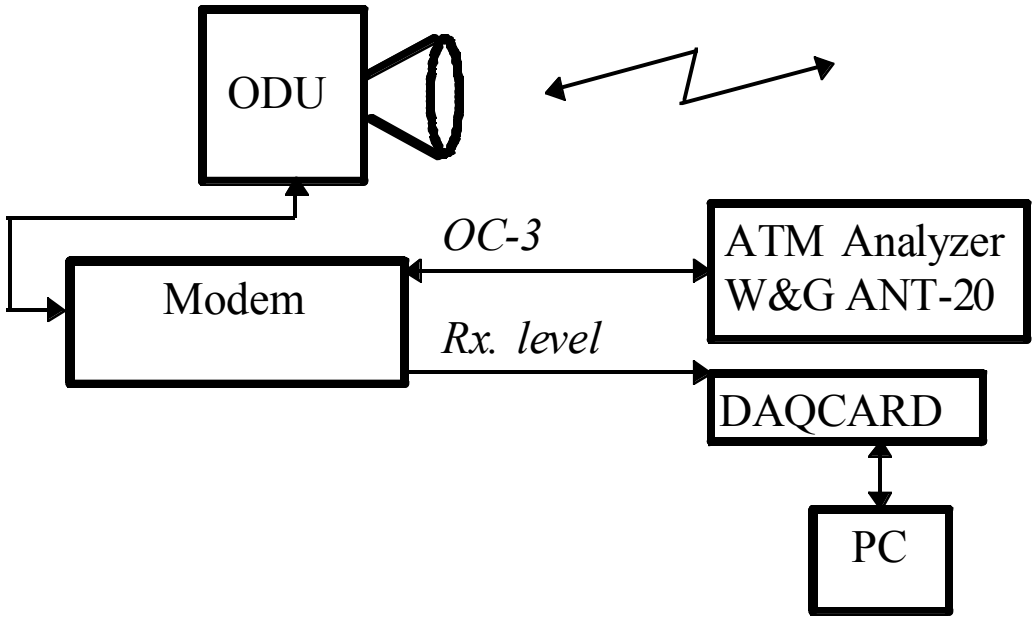

Sampling of CER/CLR and Rx level at CPE.

Downlink 26.96 Mbit/s (63579 Cells/s)

Uplink 1.80 Mbit/s (4239 Cells/s)

ATM with ODU at Room 314, left

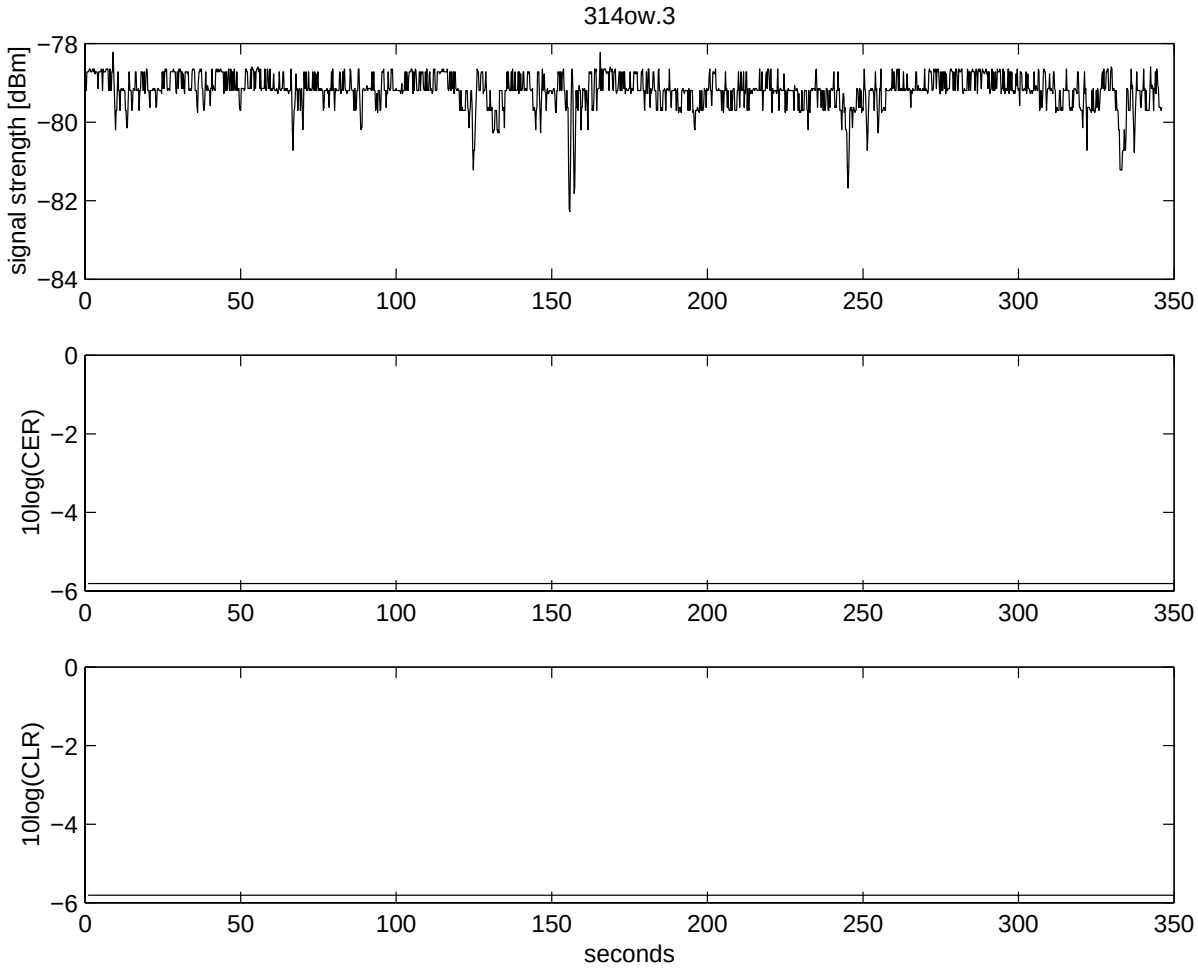

LOS

No CER/CLR during 6 min!

ATM with ODU at Room 314, right

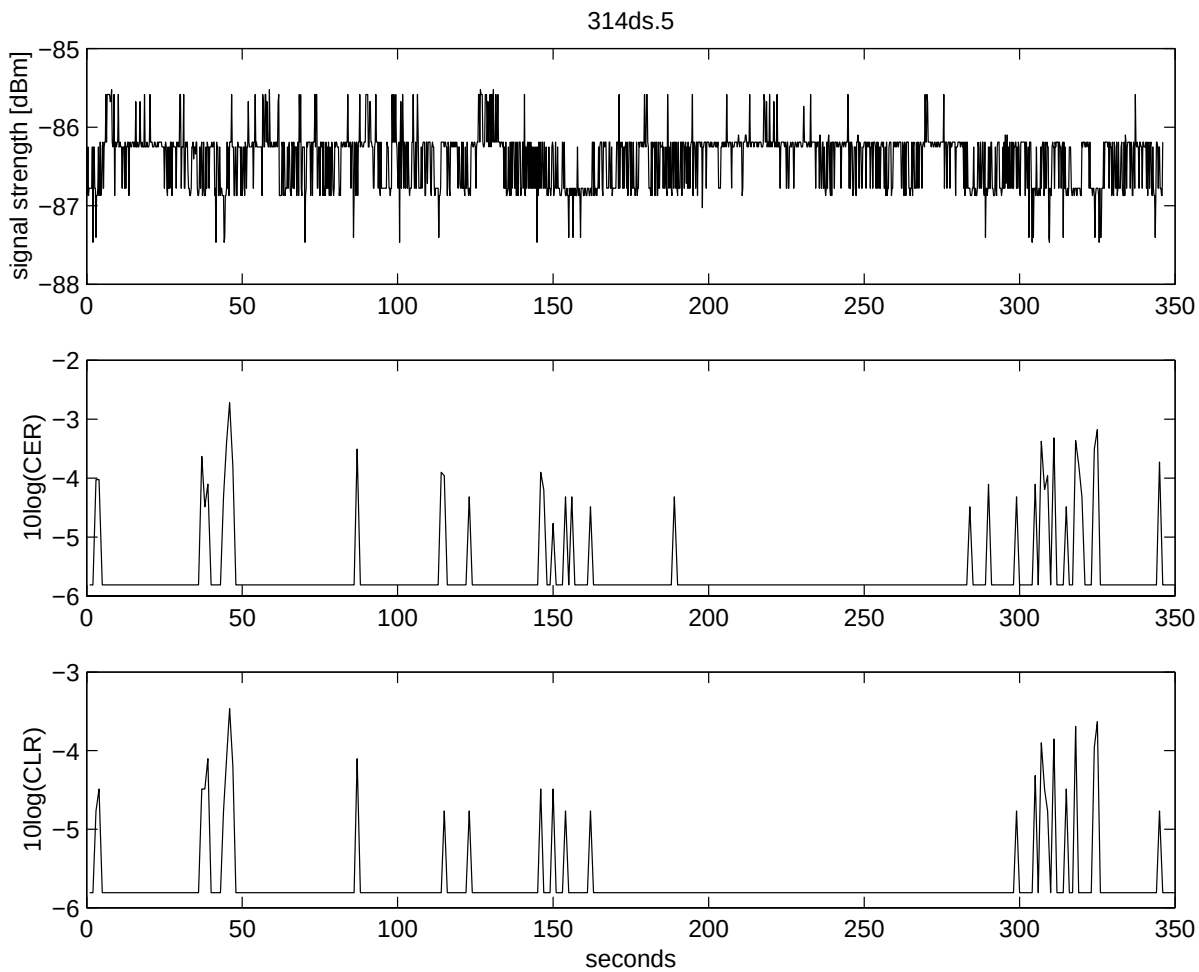

OLOS

CER: 10^{-5} -10^{-3},
CLR: 10^{-6} -10^{-4}.

Simulated LMDS Frequency Re-use

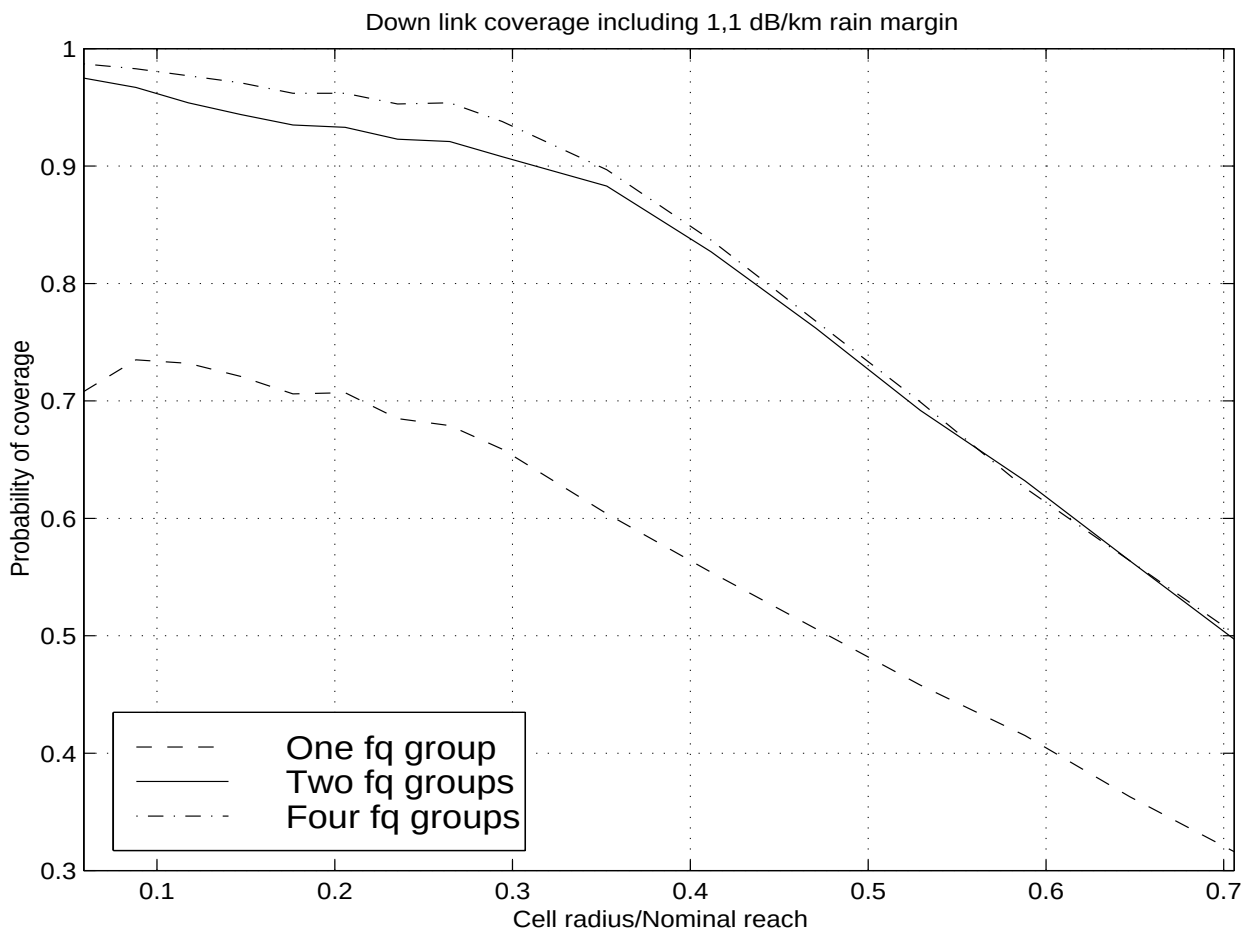

Nominal D.L. radius 8.5 km

Overlapping cells (3 tiers)

Threshold: C/(N+I)=11dB

LMDS Trial Scenario in Farsta

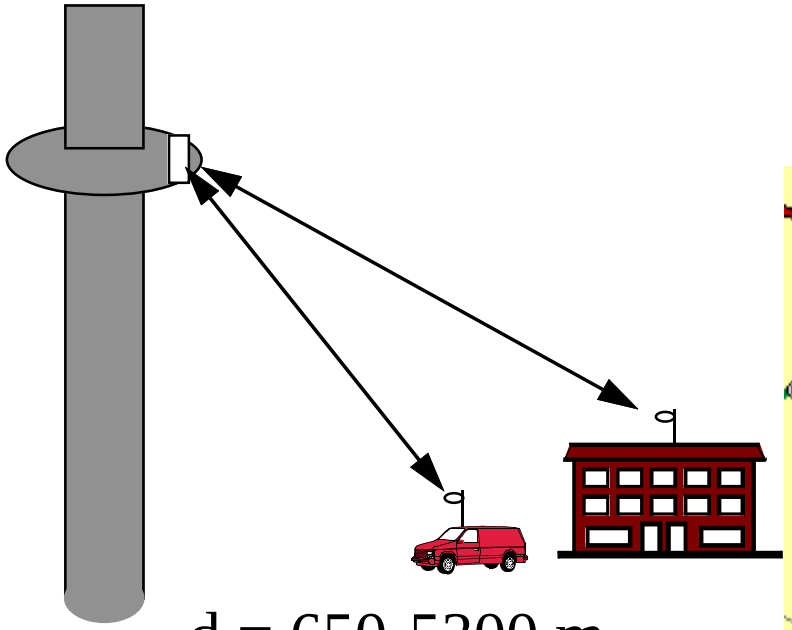

d = 650-5300 m

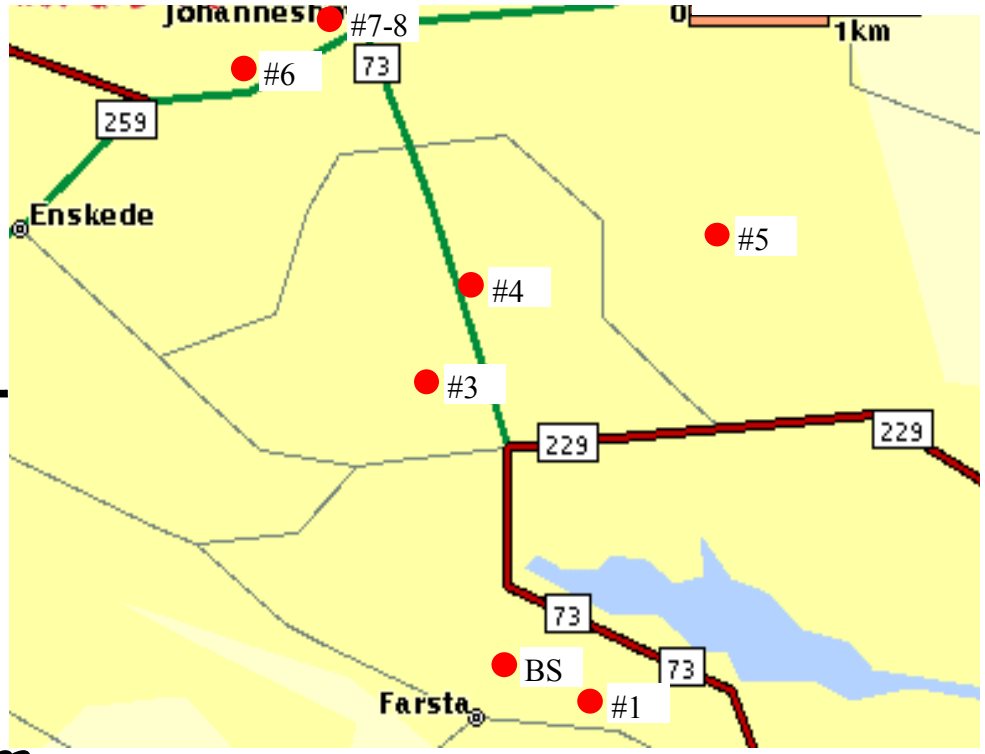

Base Station
”Farsta Tower”
h = 75 m

10 CPE
locations
h = 2,4,10 m

Relative Power vs Distance in Trial 2

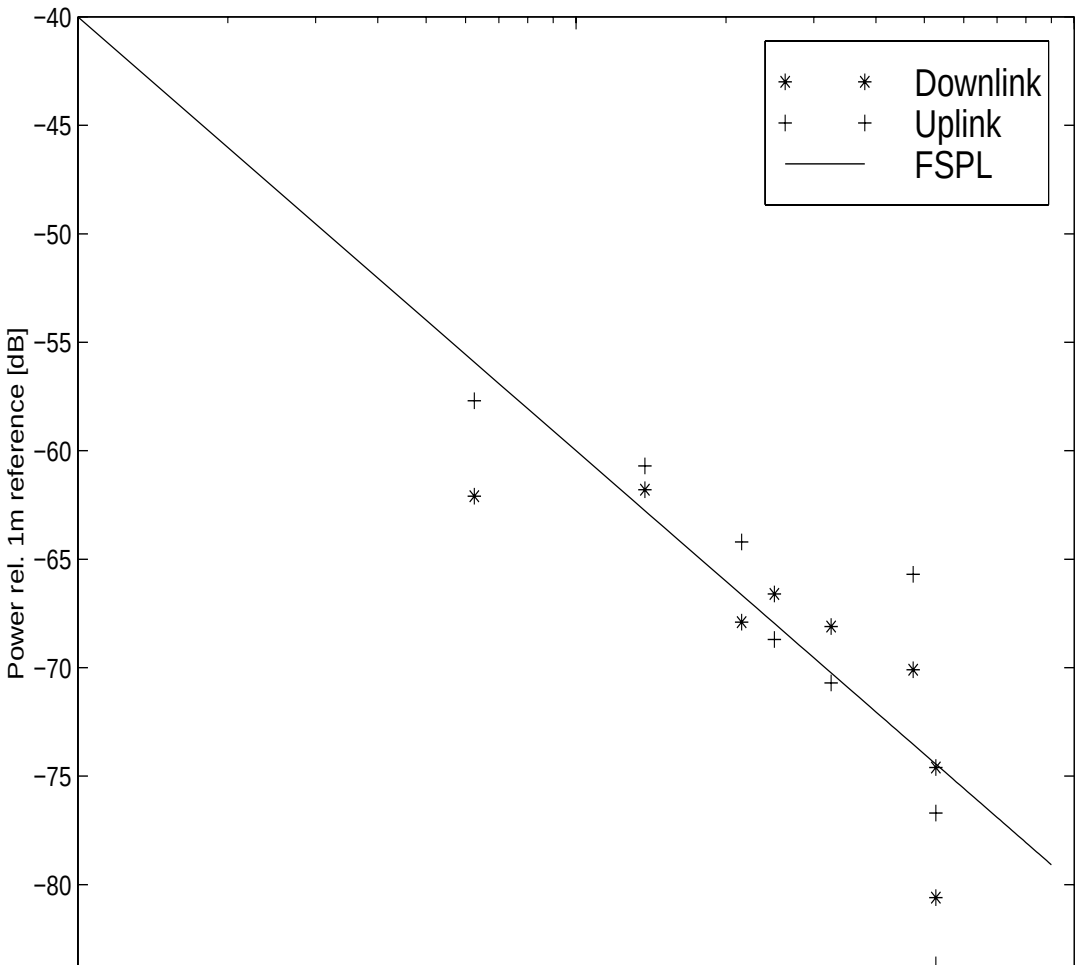

Agreement with FSPL in clear LOS.

Link established at all locations.

No BER at 5.3 km during 12 hours.

Conclusions from Telia Trials

- Link quality for ATM can be assured under clear line-of-sight conditions for up to 5.3 km.
- At locations with path obstruction (irreducible) bit errors due to multipath have been recorded.
- Low roundtrip delay, within ATM-req.
- End-Users in trial 2 satisfied with performance.

Link Budget and System Parameters

	Downlink I	Uplink I	Downlink II	Uplink II
Frequency	28 GHz	29 GHz	28 GHz	31 GHz
TX power/Carrier	20 dBm	17 dBm	22.5 dBm	20 dBm
Antennas	6 dBi	28 dBi	12 dBi	30 dBi
EIRP	25.4 dBm	42.0 dBm	33.9 dBm	47.0 dBm
RX power @ 2 km	-77.0 dBm	-80.0 dBm	-66.5 dBm	-69.3 dBm
C/N @ 2 km	18.2 dB	23.9 dB	28.6 dB	34.8 dB
C/N BER Thresh.	13.5 dB	19.1 dB	11.0 dB	17.1 dB
Link Margin	4.7 dB	4.6 dB	17.6 dB	17.7 dB
System Margin	1.9 dB	2.0 dB	14.8 dB	14.7 dB